URBENA

SILGRANIT Look Dual-finish

Faucet Specifications

Colour	SKU
Chrome/Cinder	526395
Chrome/Coal Black	526398
Chrome/Anthracite	526392
Chrome/Café	526394
Chrome/White	526391
Chrome/Truffle	526397
Chrome/Metallic Gray	526396
Chrome/Soft White	526932
Chrome/Volcano Gray	526933

Product Features

- Pull-down, insulated handspray with dual selectable patterns
- 190° swivel for extended range of motion
- Solid brass construction
- Ceramic disc cartridge
- 1.5 GPM (Gallons Per Minute) flow rate

Codes & Standards

ASME A112.18.1/CSA B125.1, NSF/ANSI 372 listed,
AB 1953, AB 100, CEC, CalGreen, George SB 370

Warranty
Limited lifetime warranty on all sinks and faucets. One-year warranty on all accessories and soap dispensers.

Code/Standards Compliance
BLANCO sinks and faucets are third-party tested and certified to CSA, cUPC, ANSI/ASME, IAPMO and NSF standards and listed by applicable certification bodies. For more information on individual product listings, contact our office or listing organization.

Need support? Learn more by watching our sink & faucet How-to videos:
https://www.blanco.com/ca-en/support/how-to-videos/how-to-videos-for-sinks/

BLANCO Canada Inc
100 Corporation Drive
Brampton ON L6S 6B5

Tel & Fax
Tel: 905-494-2400 Toll free: 1-877-425-2626
Fax: 905-494-2425 Toll free: 1-877-825-2626

While BLANCO strives to provide accurate information, all images and dimensions in this document are intended for reference only and are subject to change at any time without notice. This document is not intended for use as an installation guide. For technical installation details, refer to installation instructions provided with the product. BLANCO assumes no responsibility for the use of superseded or voided specifications.

URBENA
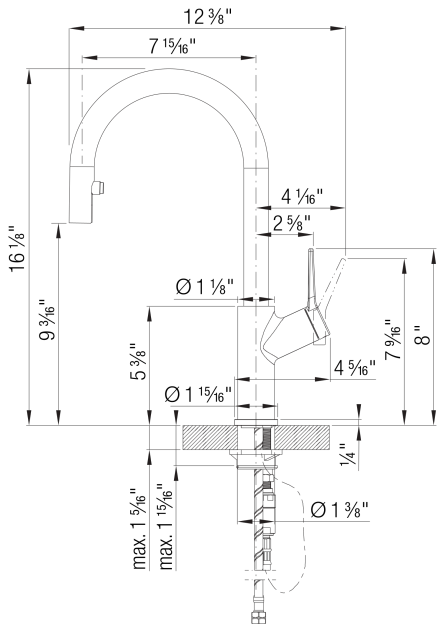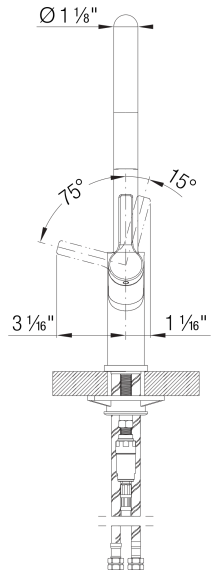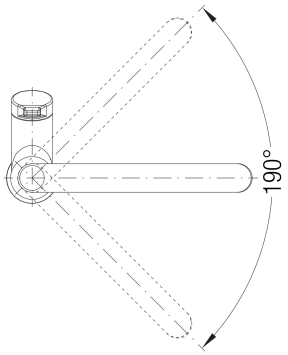
SILGRANIT Look Dual-finish